Round 2 - Friday, March 28, 2025

SHOTLINK

Texas Children's Houston Open

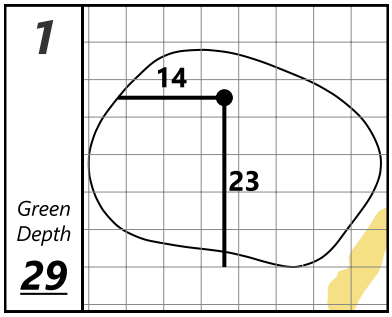

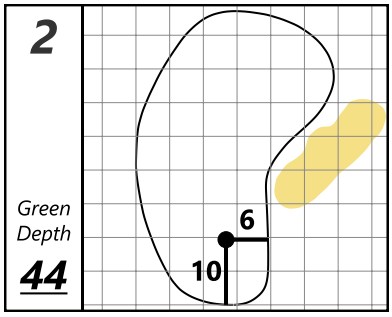

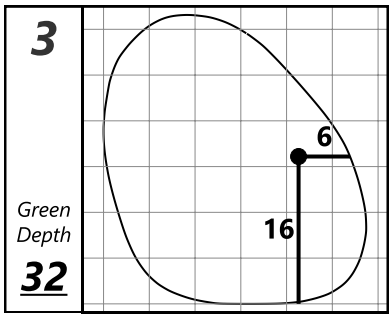

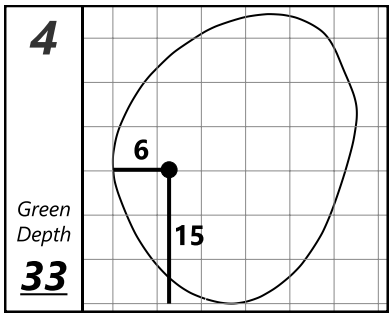

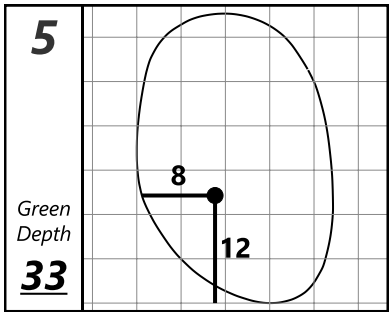

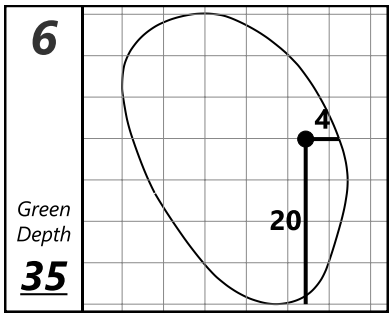

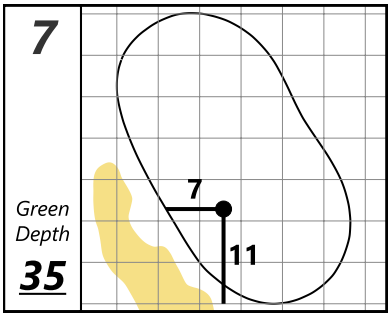

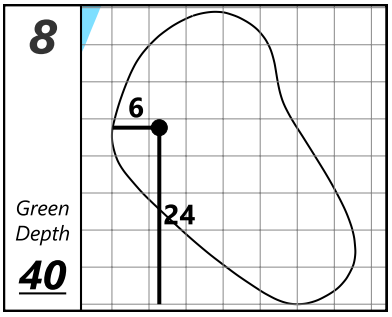

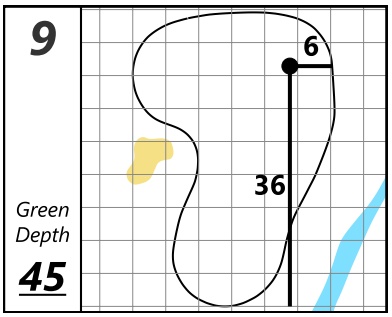

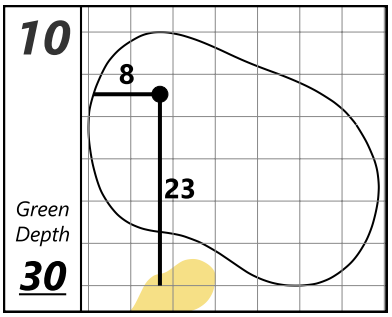

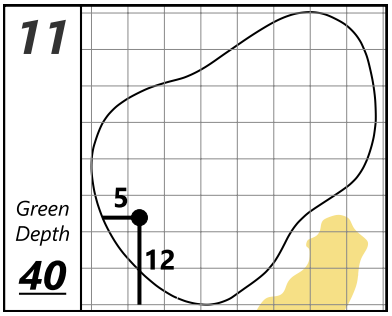

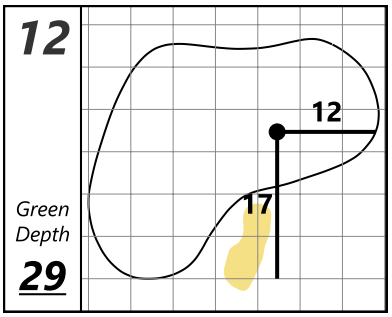

Memorial Park Golf Course

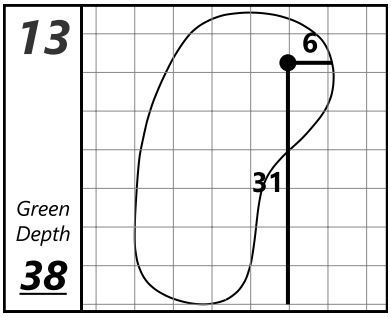

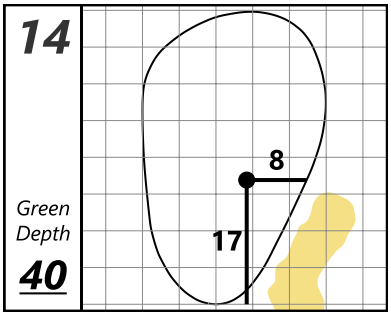

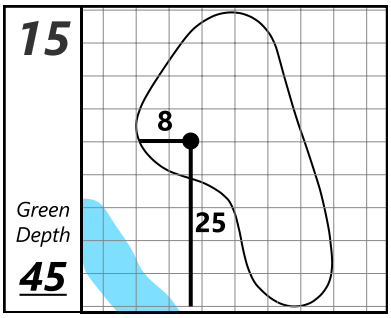

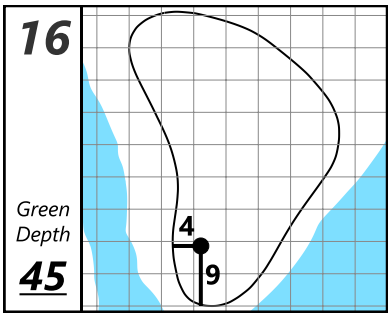

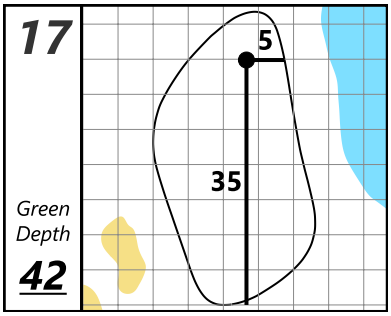

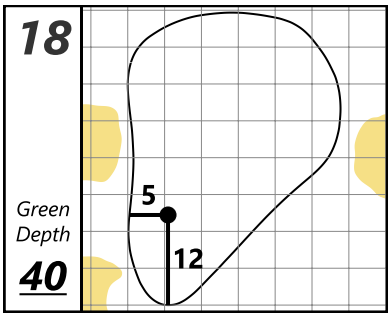

Each side of a complete square on the green represents 5 YARDS

Thursday, March 27, 2025 9:04 AM